Minebea DNQ12MF

(Fe Mg)

Characteristic

- Motor Type
  3 Phase DC Brushless Motor
- Direction of Rotation
  CW and CCW
- Control-Driver circuit built-in.
- Compact, Light Weight and High Output
- High Efficiency
- Low Noise
- Overcurrent and Locked Rotor Protection

No Plate No Cover

- Φ 57 × L33
- DC Brushless motor outer rotor type

Major Characteristic Parameters

	Min.	Nom.	Max.	Units
Operating Voltage	21.6	24	26.4	VDC
Operating Speed	300	1000	3000	min^{-1}
Continuous Rating Power		15	20	W
Rotor Inertia (Reference Value)		500		g・cm^2
Operating Temperature	0		50	°C
Operating Humidity	15		90	%RH
Motor Weight		250		g

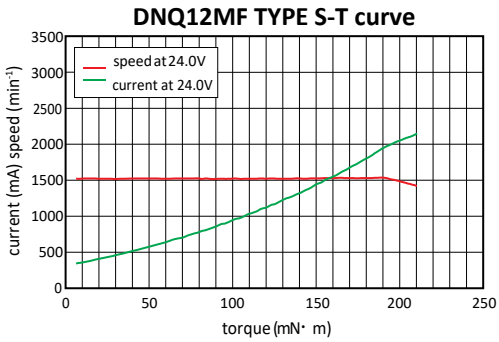

Outside Dimension (Reference)

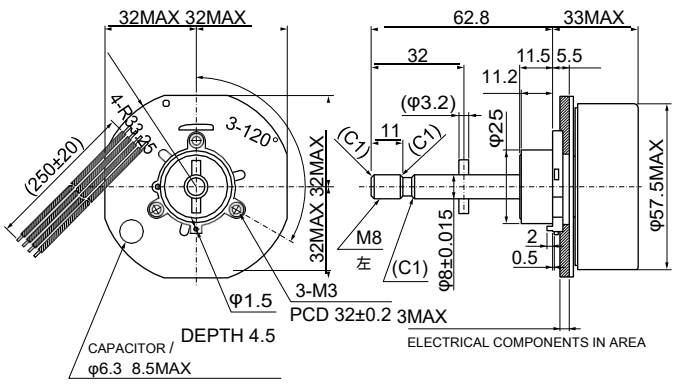

Copyright 2002 - 2020, Minebea Co., Ltd.