Minebea

BKL5 High Speed

NEW

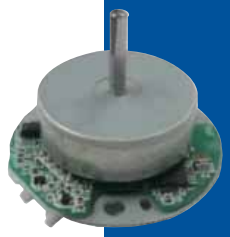

■ 3 Phase12 poles outer rotor type DC Brushless Motor

Characteristic

- Driver circuit built-in
- Driver IC
  Pre-Driver IC is mounted.
  ・Connection
  5pin　Connector 5pin
  JST : SM05B-PASS-TB
  ・Interface（5 terminals）
  ・Power Supply··· 8.0 ～ 26.4V
  ・GND
  ・FG··· 6 pulses per rotation
  ・ −0 ～ 0.3V　Open drain out-put
  -0.3 ～ 7V　Absolute maximum rating
  （I_{FG} 5mA）
  ・PWM··· Rotational speed adjustment terminal, Low active
  Low（0 ～ 0.8V）: Motor ON, High（2 ～ 5V）: Motor OFF
  PWM frequency : 15kHz ～ 30kHz
  -0.3 ～ 5.5V　Absolute maximum rating
  ・FR···CW ／ CCW switch
  High（2 ～ 5V）: CW、Low（0 ～ 0.8V）: CCW

Major Characteristic Parameters (at 12V)

Item	Specification
No load speed	26000〔min^{-1}〕
Maximal efficiency	67〔%〕（at 15mN･m）
Speed at maximal efficiency	21000〔min^{-1}〕
Continuous operation range	＜ 4A rms

※ Adjustable by winding

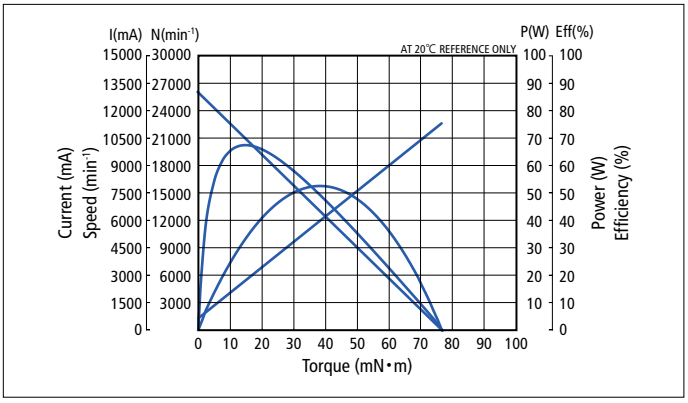

Outside Dimension (Reference)

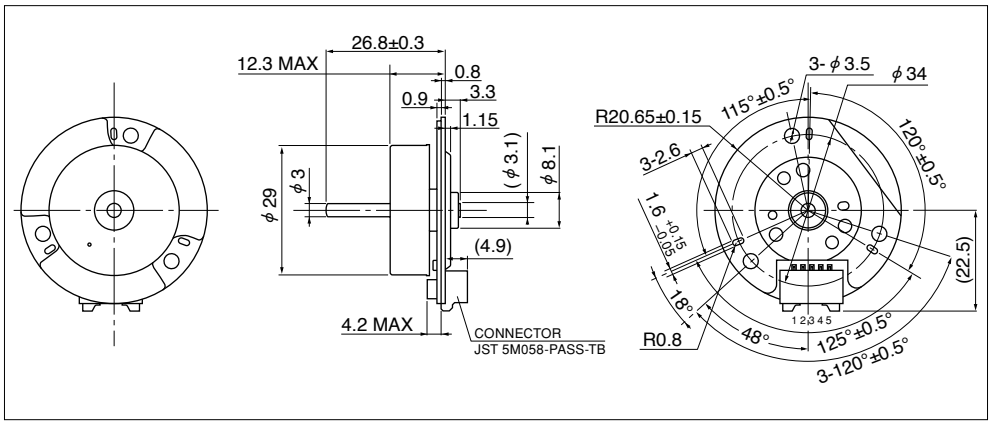

Please contact our sales for detail specification & order lot QTY. (All custom product by customer's requirement)

Copyright, MinebeaMitsumi Inc.